Physics Inspire

almanahj.com/ae
2026 2025
موقع المناهج الإماراتية

تم تحميل هذا الملف من موقع المناهج الإماراتية

موقع المناهج ⇦ المناهج الإماراتية ⇦ الصف الثاني عشر العام ⇦ فيزياء ⇦ الفصل الثالث ⇦ ملفات متنوعة ⇦ الملف

تاريخ إضافة الملف على موقع المناهج: 13-06-2026 18:35:40

المزيد من مادة فيزياء:	ملفات ا كتب للمعلم ا كتب للطالب ا اختبارات الكترونية ا اختبارات ا حلول ا عروض بوربوينت ا أوراق عمل منهج انجليزي ا ملخصات وتقارير ا مذكرات وبنوك ا الامتحان النهائي ا للمدرس
	إعداد: Khresani Mohammed

التواصل الاجتماعي بحسب الصف الثاني عشر العام

صفحة المناهج الإماراتية على فيسبوك					
المواد على تلغرام	التربية الاسلامية	اللغة العربية	اللغة الانجليزية	الرياضيات	

المزيد من الملفات بحسب الصف الثاني عشر العام والمادة فيزياء في الفصل الثالث

1	ملخص دروس المنهج 2026م
2	الهيكل وفق حل بدون Physics Inspire Grade 12 General
3	الهيكل وفق الحل مع Physics Inspire Grade 12 General
4	بنك أسئلة شامل غير محلول
5	ملزمة جميع دروس ووحدات الفصل الثالث منهج بريدج

وزارة التربية والتعليم
MINISTRY OF EDUCATION

Physics Inspire

Grade 12 General

Third Term 2025- 2026

اِحجِزْ مَكانَكَ وَاستَعِدَّ لِلْامتِحَانِ بِثِقَةٍ كَامِلَةٍ

احصل على الشرح الكامل للصف من خلال:

التواصل والحجز عبر الـ Whatsapp
اضغط على الرقم: 0501520027

للتواصل والحجز

للانتقال إلى المواقع
اضغط هنا

شرح الدروس

انضم للقناة

NOLOGIA

NOLOGIA

اضغط على الاسم لتحصل على مزيد من الملفات في تلغرام: MR.MOHAMAD

NOLOGIA

Mohammed Khresani

يمكنكم الحصول على

جلسة امتحانية مع ملاحظات هامة

شرح الهيكل كامل

ملازم محلولة

شرح وحل امتحان سابق

شرح دروس الفصل كامل

بـ 199 درهم فقط

ملف يحتوي على أهم الأسئلة المتوقعة

لا تتردد في التواصل معنا قم بمسح الـ QR

احصل على الشرح الكامل للصف من خلال:

التواصل والحجز عبر الـ Whatsapp

اضغط على الرقم: 0501520027

NOLOGIA 0501520027

Question 1 & 2: Demonstrate the potential difference and current flow in a circuit using river mode.

Explain the characteristics of a series circuit. Page (57)

MCQ – الأسئلة الموضوعية

1. **In the mountain river model used to represent the electrical circuit, what does the "distance that the river descends" from the mountain peak to the plain represent?**

A. Electrical resistance.
B. Electric current intensity.
C. Electrical potential difference.
D. Battery or power generator.

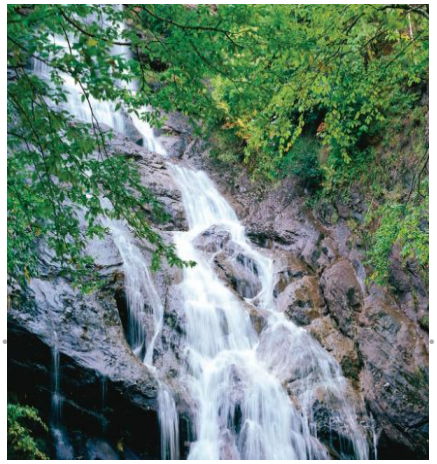

2. **Which part of the river water cycle represents the "battery or generator" in the electrical circuit according to the physical model?**

A. Huge rocks and barriers.
B. River water flow rate.
C. The sun (the energy source required to lift the water).
D. The distance the river descends.

NOLOGIA 0501520027

3. **The flow of a mountain river is similar to the electric current in an electrical circuit (as shown in the figure) because:**

A. Water disappears as it passes through different paths.
B. The potential difference increases with the number of paths.
C. The amount of water and the amount of electrical charges remain the same regardless of the path.
D. Resistance increases the speed of charge flow.

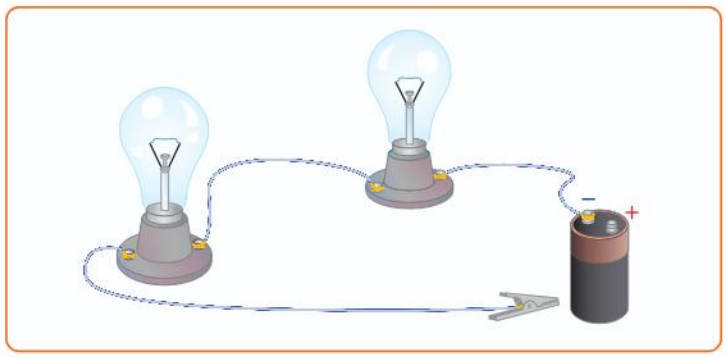

4. **Based on the diagram, if three ammeters are connected in different locations within a series circuit, what will these devices show?**

A. The device closest to the positive electrode will give a higher value.
B. The last device will give a lower value due to the current consumption of the lamps.
C. All devices will display the same current value.
D. The middle device will show a current value equal to zero.

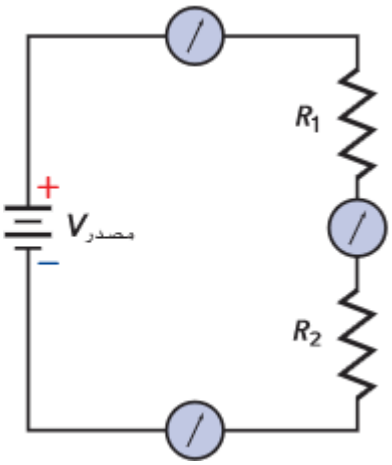

NOLOGIA 0501520027

5. **What is the precise definition of a "Series Circuit" as shown in the figure?**

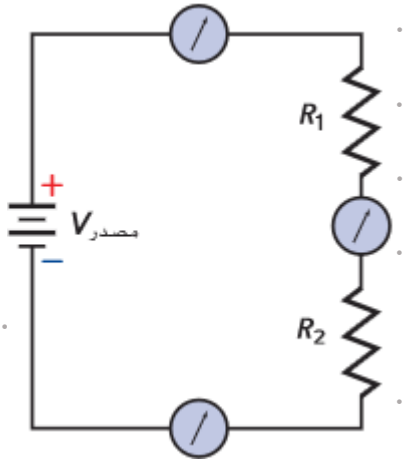

A. It is a circuit in which the current has only one path.
B. It is the circuit in which the current branches into several paths.
C. It is the circuit in which the potential difference is constant across all resistors.
D. It is the circuit in which the current intensity increases by adding more lamps.

6. **In the series circuit shown in the figure, if the circuit is opened (the link is cut) at any point, what happens to the current in the rest of the circuit?**

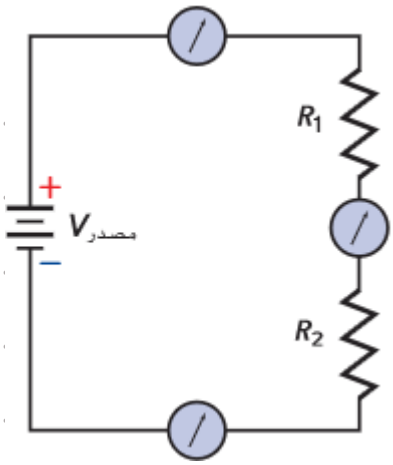

A. The current continues to flow in the rest of the parts.
B. The current increases in the parts closest to the battery.
C. No current will flow in any branch of the circuit.
D. The direction of the current is reversed automatically.

NOLOGIA 0501520027

7. A 9.0 V battery is connected to four light bulbs, as shown in the figure. Find the equivalent resistance of the circuit and the current flowing through it.

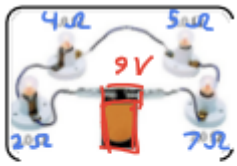

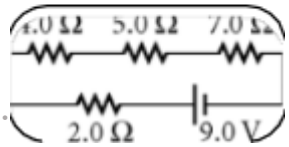

A. 18 Ω
B. 9 Ω
C. 15 Ω
D. 3 Ω

8. Three resistors, each with a resistance of 20 ohms, are connected in series to a 120-volt generator. What is the equivalent resistance of the circuit? What is the current flowing through the circuit?

A. 0.7 A , 65 Ω
B. 2 A , 60 Ω
C. 15 A , 70 Ω
D. 23 A , 45 Ω

NOLOGIA 0501520027

9. A series circuit has two voltage drops: 5.50 V and 6.90 V. What is the supply voltage?

A. 21 V
B. 4.5 V
C. 12.4 V
D. 7 Ω

10. Two lamps, one with a resistance of 22 ohms and the other 4.5 ohms, were connected in series and placed on a potential difference of 45 volts as shown in the figure.

a. What is the equivalent resistance of the circuit?

A. 18 Ω
B. 26.5 Ω
C. 9.3 Ω
D. 4 Ω

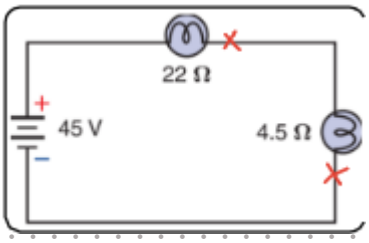

NOLOGIA 0501520027

b. What is the current flowing through the circuit?

A. 32 A
B. 50 A
C. 5.4 A
D. 1.7 A

c. Find the potential difference between the two ends of each lamp.

A. $\Delta V_1 = 37.4\ V$, $\Delta V_2 = 7.7\ V$
B. $\Delta V_1 = 20.4\ V$, $\Delta V_2 = 3\ V$
C. $\Delta V_1 = 15.7\ V$, $\Delta V_2 = 13\ V$
D. $\Delta V_1 = 7.4\ V$, $\Delta V_2 = 12.8\ V$

NOLOGIA 0501520027

11. The diagram represents an electrical circuit.

a. What is the equivalent resistance in the circuit?

A. 50 Ω
B. 62 Ω
C. 12.8 Ω
D. 8.7 Ω

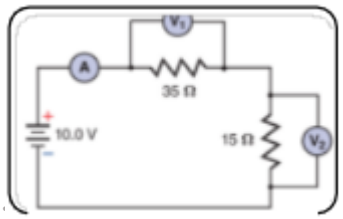

b. What is the ammeter reading?

A. 41.1 A
B. 32 A
C. 0.2 A
D. 13 A

NOLOGIA 0501520027

c. What is the reading on voltmeter 1?

A. $\Delta V_1 = 3\ V$
B. $\Delta V_1 = 0.4\ V$
C. $\Delta V_1 = 7\ V$
D. $\Delta V_1 = 4\ V$

d. What is the voltmeter reading?

A. $\Delta V_2 = 77\ V$
B. $\Delta V_2 = 3\ V$
C. $\Delta V_2 = 18\ V$
D. $\Delta V_2 = 17\ V$

NOLOGIA 0501520027

e. How much energy does the battery provide per minute?

A. 12 J
B. 120 J
C. 20 J
D. 120 W

Question 3 & 4 & 5 & 6: Define an equivalent resistance. Explain the characteristics of a series circuit. Calculate the equivalent resistance and the total current passing through a series circuit. Solve problems to find the current, voltages and resistances in a series circuit. Page (58)

MCQ – الأسئلة الموضوعية

1. Three resistors of values of 5 Ω, 15 Ω, and 12 Ω are connected in series to a battery with a voltage of [value missing]. What is the equivalent resistance of the circuit?

A. 15 Ω
B. 4 Ω
C. 60 Ω
D. 32 Ω

NOLOGIA 0501520027

2. In the previous circuit (75 V battery and equivalent resistance 32 Ω), what is the magnitude of the electric current flowing through the circuit?

A. 0.43 A
B. 2.34 A
C. 5 A
D. 3.2 A

3. Three resistors, each with a value of 22 Ω, are connected in series with a power source of 125 V. What is the equivalent resistance of the circuit? Then calculate the value of the current flowing in the electrical circuit.

A. 2.9 A ، Ω66
B. 12.3 A ، Ω32
C. 5.2 A ، Ω33
D. 3.6 A ، Ω66

NOLOGIA 0501520027

4. A string of lamps contains ten identical lamps of equal resistance connected in series. When the string is connected to a 117 V power supply, the current flowing through the circuit is 0.06 A. What is the resistance of each lamp?

A. $2.0 \times 10^2\ \Omega$
B. $2.5 \times 10^3\ \Omega$
C. $0.2 \times 10^4\ \Omega$
D. $20 \times 10^2\ \Omega$

5. In a series electrical circuit, if an additional resistor is added, the total current in the circuit becomes:

A. increases
B. decreases
C. It remains as it is
D. Becomes zero

NOLOGIA 0501520027

6. Calculate the potential difference values across the three resistors: 12 Ω, 15 Ω, and 5 Ω, connected in series to a 75 V battery. Verify that the sum of the potential difference values of the resistors equals the potential difference of the battery.

A. $V_1 = 27\,V$, $V_2 = 29\,V$, $V_3 = 11\,V$ $V_1 + V_2 + V_3 = 67\,V$
B. $V_1 = 28\,V$, $V_2 = 35\,V$, $V_3 = 12\,V$ $V_1 + V_2 + V_3 = 75\,V$
C. $V_1 = 30\,V$; $V_2 = 42\,V$, $V_3 = 20\,V$ $V_1 + V_2 + V_3 = 92\,V$
D. $V_1 = 25\,V$, $V_2 = 30\,V$, $V_3 = 15\,V$ $V_1 + V_2 + V_3 = 70\,V$

7. Assume that the values of the electrical circuit elements shown in the example are: $R_1 = 255\,\Omega$, $R_2 = 290\,\Omega$, $\Delta V_1 = 17\,V$,If there is no other information, please answer the following:

a. What is the current flowing through the circuit?

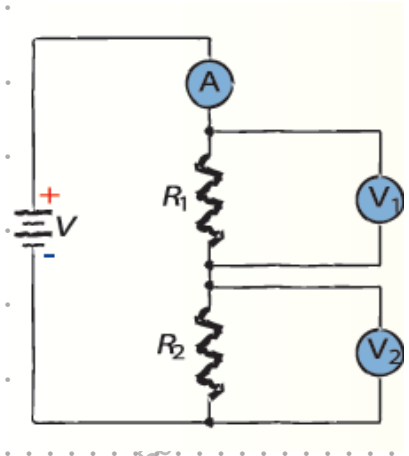

A. A 2.3102
B. 0.31 A
C. 0.0667 A
D. 8.213 A

NOLOGIA 0501520027

b. What is the battery voltage?

A. 10 V
B. 36.4 V
C. 15 V
D. 17 V

c. What is the total electrical power dissipated in the circuit? And what is the power dissipated in each resistor?

A. $P_{\text{Total}} = 2.42\ W$, $P_{R1} = 1.13\ W$, $P_{R2} = 1.29\ W$
B. $P_{\text{Total}} = 0.46\ W$, $P_{R1} = 0.24\ W$, $P_{R2} = 0.22\ W$
C. $P_{\text{Total}} = 1\ W$, $P_{R1} = 0.56\ W$, $P_{R2} = 0.44\ W$
D. $P_{\text{Total}} = 3.6\ W$, $P_{R1} = 2.4\ W$, $P_{R2} = 1.2\ W$

NOLOGIA 0501520027

8. A series circuit consists of a 12V battery and three resistors. The potential difference across one resistor is 1.2V, and across another resistor it is 3.3V. What is the potential difference across the third resistor?

A. 3.6 V
B. 5.6 V
C. 7.5 V
D. 24 V

9. A 22 Ω resistor and a 33 Ω resistor are connected in series to a 120 V power supply.

a. What is the equivalent resistance of the circuit?

A. 55 Ω
B. 5.5 Ω
C. 33 Ω
D. 25.3 Ω

NOLOGIA 0501520027

b. What is the value of the current flowing through the circuit?

A. 6.5 A
B. 2.2 A
C. 3.4 A
D. 5.6 A

c. What is the potential difference across each resistor?

A. 40 V , 71 V
B. 52 V , 89 V
C. 32 V , 41 V
D. 48 V , 72 V

NOLOGIA 0501520027

10. Three resistors of values of 3.3 K Ω , 4.7 K Ω, and 3.9 K Ω are connected in series via a 12 V battery..

a. What is the equivalent resistance of the circuit?

A. 11.9K Ω
B. 14.2K Ω
C. 11.9 Ω
D. 56.8 Ω

b. What is the value of the current passing through the resistors?

A. 2.1×10^{-4} A
B. 1.0×10^{-2} A
C. 1.0×10^{-3} A
D. 7.4×10^{-3} A

NOLOGIA 0501520027

11. Which of the following statements correctly describes the current in a series electrical circuit?

A. The current increases with each resistance the charges pass through.
B. The current is distributed between the resistors based on their values.
C. The current has a single value in every part of the circuit.
D. The current gradually decreases until it reaches the negative terminal of the battery.

NOLOGIA 0501520027

Question 7 & 8: Solve problems to find the current, voltages and resistances in a series circuit. Explain the importance of a voltage-divider circuit to achieve a desired potential difference. Use the voltage divider circuit as a series circuit to calculate resistances and voltage drop across the components. Page (59 & 61)

MCQ – Objective Questions

1. **Looking at the diagram, what is the primary role of a "voltage divider" in electronic devices such as a light meter?**

A. The intensity of the current passing through the circuit increased significantly.
B. Generating a source with a voltage difference lower than the battery voltage difference.
C. It acts as a switch to open the circuit when light falls.
D. Converting alternating current to direct current.

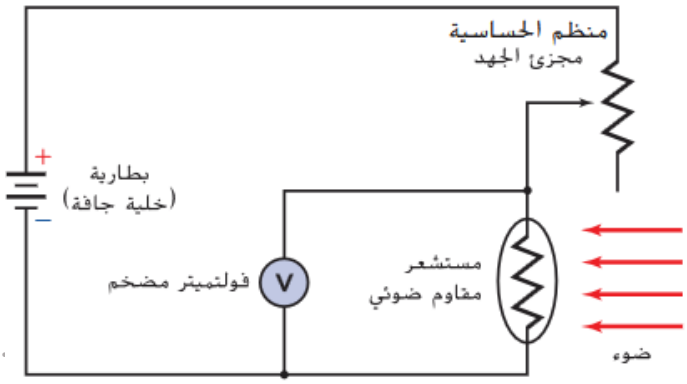

2. **According to the diagram, how does the resistance of a "photoresistor" (sensor) change when exposed to light?**

A. Its resistance increases to reach 400,000 ohms.
B. Its resistance drops to around 400 ohms.
C. Its resistance remains constant and is unaffected by light.
D. Its resistance becomes completely zero and it becomes a superconducting wire.

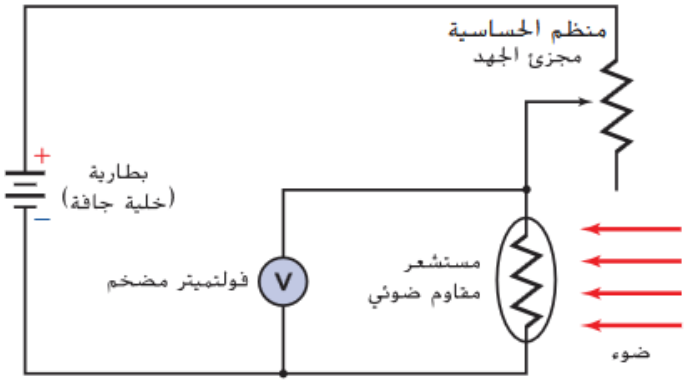

NOLOGIA 0501520027

3. **The voltage produced by the voltage divider circuit in a light meter (Figure) depends on:**

A. Room temperature only.
B. Digital display screen area.
C. The amount of light falling on the photoresistor.
D. Number of ammeters connected in series.

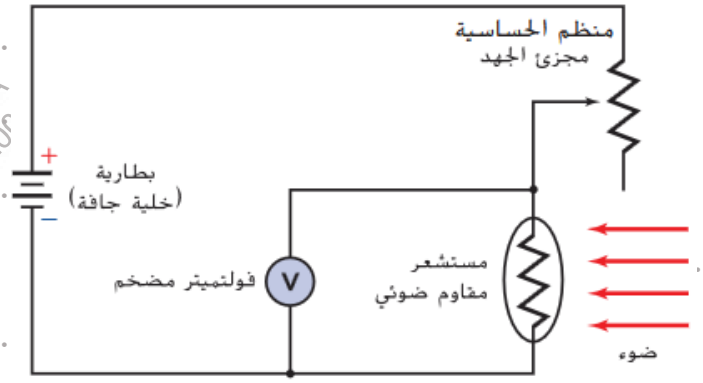

4. **(Based on the diagram) A 9.0 V battery is connected to two resistors, R_1 =390 Ω and R_2= 470 Ω, which act as a voltage divider. What is the magnitude of the voltage across the resistor R_2 = 470 Ω ?**

A. 4.1 V
B. 9.0 V
C. 4.9 V
D. 5.5 V

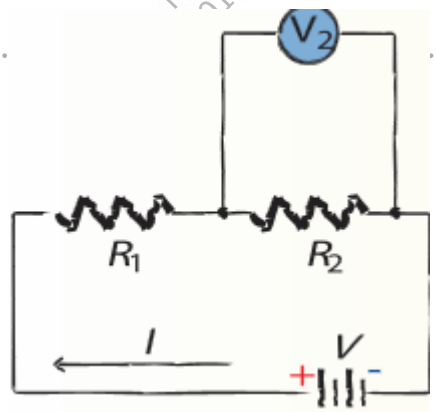

NOLOGIA 0501520027

5. **In a voltage divider circuit consisting of two resistors in series, if the value of the resistance is greater than half the equivalent resistance of the circuit, then the potential difference across it is:**

A. Always equal to zero.
B. Less than half the battery capacity.
C. Greater than half the battery's capacity.
D. Equal to the full battery voltage.

6. **Which of the following equations is correctly used to calculate the potential difference across the second resistor (V_2) in a voltage divider circuit consisting of R_1 and R_2?**

A. $V_2 = \frac{V_{source} \times R_2}{R_1 + R_2}$
B. $V_2 = V_{source} \times (R_1 + R_2)$
C. $V_2 = I \times (R_1 + R_2)$
D. $V_2 = \frac{R_1 + R_2}{V_{source}}$

7. **Determine the value of a resistor to be used as part of a voltage divider connected to a 1.2 k Ω resistor. The potential difference across the 1.2 k Ω resistor will be 2.2 V when the source is 12 V.**

A. 78.5 K Ω
B. 5.3 Ω
C. 5.3 K Ω
D. 6.3 K Ω

NOLOGIA 0501520027

8. A "voltage divider" circuit is used to produce a voltage source:

A. Greater than the voltage of the battery used
B. Lower the battery voltage by selecting appropriate resistors.
C. Constant and unaffected by changes in resistances
D. It only works with direct current.

Question 9 & 10: Explain the characteristics of a parallel circuit. Calculate the equivalent resistance of a parallel circuit. Solve problems to find the current, voltages and resistances in a parallel circuit. Page (64 & 65)

MCQ – Objective Questions

1. Three resistors with values of 30 Ω, 60 Ω, and 20 Ω are connected in parallel with a 90 V battery. What is the equivalent resistance of the circuit?

A. 10 Ω
B. 20 Ω
C. 18 Ω
D. 27 Ω

NOLOGIA 0501520027

2. In the previous circuit (90 V battery and equivalent resistance 10 Ω), what is the total current coming out of the battery?

A. 4.50 A
B. 9.00 A
C. 1.50 A
D. 37 A

3. If two 15 Ω resistors and two 15 Ω resistors are connected in parallel to a 30 V battery, what is the current flowing through each branch?

A. 0.5 A
B. 4 A
C. 2 A
D. 1.0 A

4. What happens to the equivalent resistance in a parallel circuit when a new resistance is added to the paths?

A. The equivalent resistance increases.
B. The equivalent resistance decreases and becomes smaller than the smallest single resistance.
C. The equivalent resistance remains constant.
D. The equivalent resistance is doubled

NOLOGIA 0501520027

5. **In a parallel circuit, which physical property remains constant across all branches?**

A. Electric current intensity.
B. Electrical potential difference.
C. Electrical power.
D. electrical resistance

6. **I connected a 120.0 Ω resistor, a 60.0 Ω resistor, and a 40.0 Ω resistor in parallel with a 12.0 V battery.**

   a. **What is the equivalent resistance of a parallel circuit?**

A. 20 Ω
B. 62 Ω
C. 7.8 Ω
D. 21.4 Ω

NOLOGIA 0501520027

b. What is the magnitude of the total electric current flowing through the circuit?

A. 0.6 A
B. 5.9 A
C. 8.9 A
D. 12 A

c. What is the current intensity through each branch of the circuit?

A. 0.35 , 0.54 , 0.56 A
B. 0.100 , 0.200 , 0.300 A
C. 1.2 , 3.2 , 4.8 A
D. 14 , 5.2 , 6.7 A

NOLOGIA 0501520027

Question 11: State Kirchhoff's loop rule and relate it to the conservation of energy. Apply Kirchhoff's loop rule to electric circuits. State Kirchhoff's junction rule and relate it to the conservation of charge. Apply Kirchhoff's junction rule to electric circuits. Page (66)

MCQ – Objective Questions

1. **Kirchhoff's "Junction Rule" is based primarily on the law:**

A. Conserving energy.
B. Save the shipment.
C. Maintaining momentum.
D. Ohm's law of resistances.

2. **Looking at the diagram of connection A, which of the following equations correctly expresses the current flow at that point?**

A. $I_1 = I_2 - I_3$
B. $I_1 = I_2 + I_3$
C. $I_3 = I_1 + I_2$
D. $I_1 + I_2 + I_3$

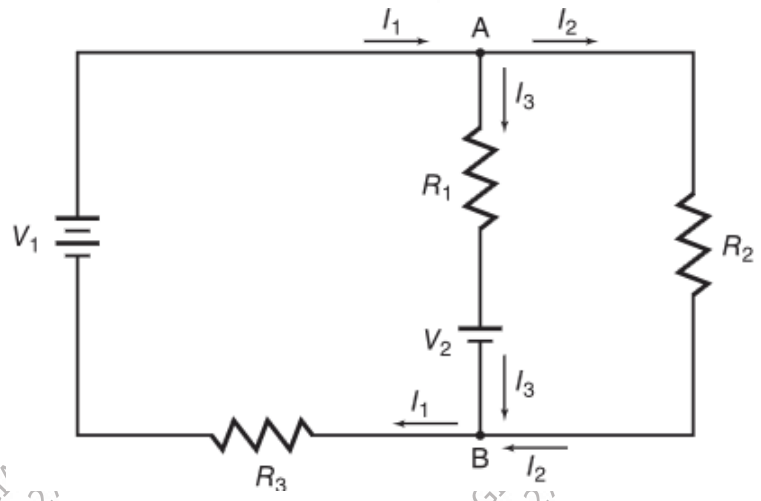

NOLOGIA 0501520027

3. **If the current entering connection A in the figure is I_1=1.5 A, and the current passing through the first branch is I_3=0.6 A, what is the value of the current passing through the second branch?**

A. 0.9 A
B. 0.6 A
C. 2.1 A
D. 1.5 A

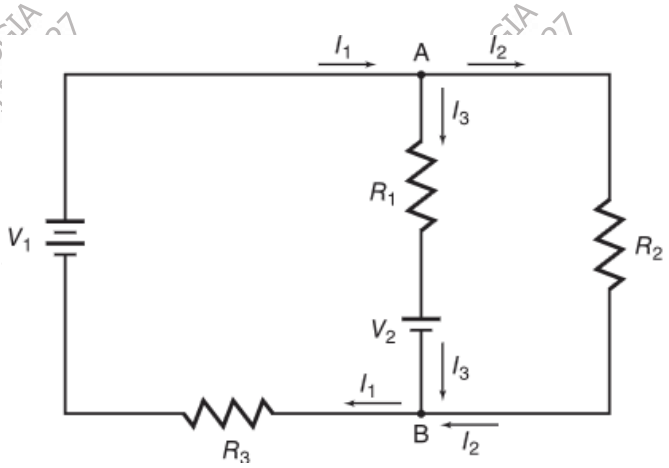

4. **What is the scientific definition of a "junction" in an electrical circuit?**

A. It is the wire that connects the positive terminal to the negative terminal.
B. It is any resistor connected in series in a circuit.
C. It is a location where three or more wires are connected to each other.
D. It is the space between the plates of an electrical capacitor.

NOLOGIA 0501520027

5. **Kirchhoff's loop rule (which relates to potential difference) is a direct application of the law:**

A. Save the shipment.
B. Conserving energy.
C. Maintaining momentum.
D. Ohm's Law.

6. **According to Kirchhoff's junction law (based on the conservation of charge), if a current of 1.0 A enters a junction and branches into two paths, and the current in the first path is 0.3 A, what is the value of the current in the second path?**

A. 1.0 A
B. 1.3 A
C. 0.3 A
D. 0.7 A

7. **Which of the following statements describes the relationship between the base of the ring and energy?**

A. The energy of the charge does not change when it returns to the same point after rotating in a closed loop.
B. The energy of the charge increases continuously with each rotation in the loop.
C. Energy is completely lost at the first resistance encountered by the charge.
D. The potential difference increases as the number of resistors in the loop increases.

NOLOGIA 0501520027

Question 12: Define a short circuit and describe its effects. Identify a fuse, a circuit breaker, and a ground-fault interrupter. Page (67)

MCQ – Objective Questions

1. **What is the primary function of a "fuse" in an electrical circuit?**

A. Increase the electrical voltage when needed.
B. A piece of metal melts when an extremely large current passes through it, thus stopping the flow of current.
C. Storing electrical charges for use during power outages.
D. Converting alternating current to direct current to protect devices.

2. **Considering the "circuit breaker" shown in the figure, what causes the bimetallic strip to bend and the circuit to open?**

A. The surrounding air is cold.
B. A sudden drop in voltage difference.
C. The heat generated by the passage of a very high current through the strip.
D. The user manually pressed the power button.

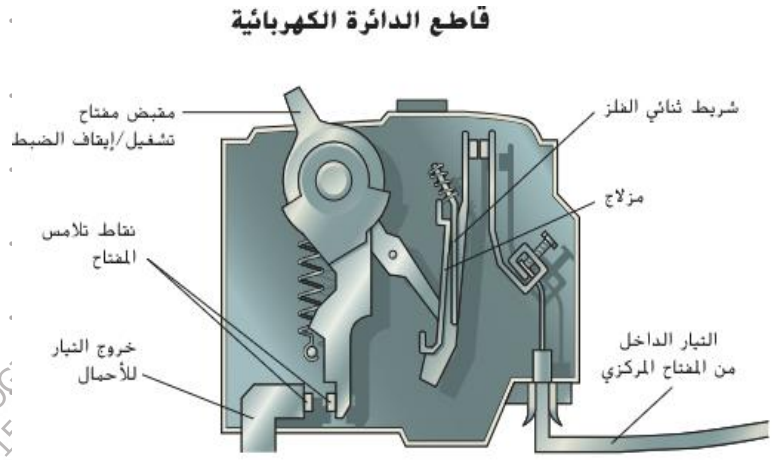

NOLOGIA 0501520027

3. **Electronic sensors detect "tiny differences" in the current caused by an additional current path (such as a leaking current to water)?**

A. Ordinary melt.
B. Magnetic circuit breaker.
C. Ground Fault Interrupter (GFI).
D. The switch is bipolar.

4. **Based on the diagram, what happens when the current exceeds the allowed value in the circuit breaker?**

A. The wires inside the walls melt instantly.
B. The clamp moves to close the position, which opens the switch contacts and stops the current.
C. The current increases in order to overcome the resistance.
D. The current automatically diverts to an alternative path through the ground.

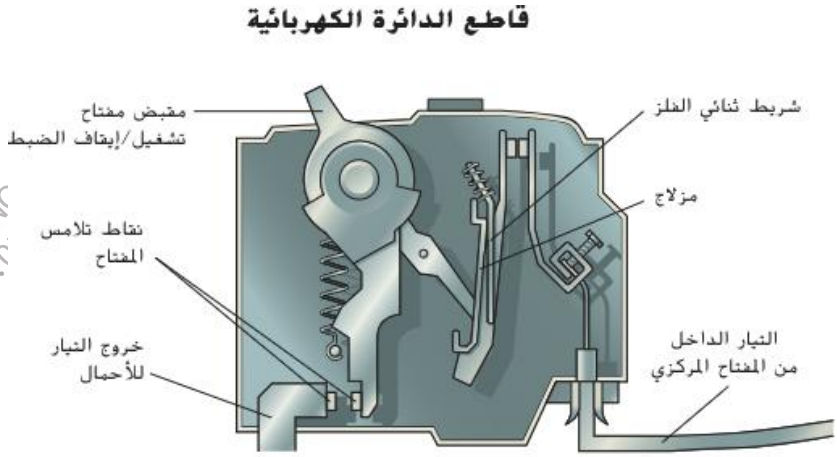

NOLOGIA 0501520027

5. **Why are safety devices (fuses and circuit breakers) necessary in home wiring?**

A. Because it reduces the electricity consumption bill.
B. Because it prevents overloads or fires caused by short circuits.
C. Because they act as backup batteries when the power goes out.
D. Because it increases the speed of electron flow in the wires.

6. **What is the scientific definition of a "short circuit"?**

A. It is a circuit that contains a very large number of resistors.
B. It is a circuit with very low resistance, which results in a very large current passing through.
C. It is a circuit in which the wire is cut and the current is prevented from flowing.
D. It is a circuit that operates at a very low voltage to protect the devices.

7. **Why is a short circuit dangerous in home electrical wiring?**

A. Because it causes a significant drop in the temperature of the wires.
B. Because it prevents the generator from producing energy.
C. Because the large current generates high heat that may lead to a fire.
D. Because it suddenly increases the resistance of the wires.

NOLOGIA 0501520027
almanahj.com/ae 2026 2025 موقع المناهج الإماراتية

Question 13 & 14: Describe a combined series-parallel circuit. Calculate the equivalent resistance of combined series-parallel circuits. Calculate the voltage, current, and power dissipation for any resistor in a combined series-parallel circuit. Page (69 & 72)

MCQ – Objective Questions

1. What is the correct scientific definition of a "composite circuit" as shown in the figure?

A. It is a circuit that contains multiple batteries connected in series.
B. It is a circuit that contains a combination of series and parallel connections.
C. It is a circuit in which the current is constant in all its branches.
D. It is a circuit that has no internal resistance in the wires.

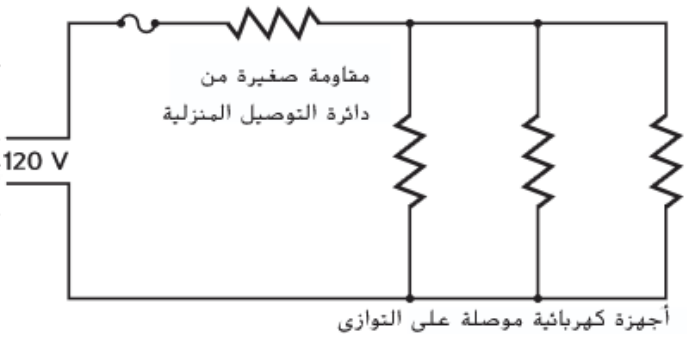

2. Looking at the diagram, why do the lights in the house sometimes dim when devices that consume a lot of current are switched on?

A. Because household appliances are always connected in series only.
B. Because the current completely stops flowing through the lamps.
C. Because there is a small resistance in the connecting wires connected in series, this causes a drop in voltage when the current increases.
D. Because the equivalent resistance of the devices increases when they are operated together.

NOLOGIA 0501520027

3. **What is the first essential step to simplifying a complex circuit?**

A. Put all the resistors of the circuit together as if they were connected in series.
B. Identifying resistors connected in parallel and calculating their equivalent resistance to simplify the process.
C. Measure the total current intensity using an ammeter before any step.
D. Ignore the small resistors present in the connecting wires.

4. **If a circuit contains a lamp (12 Ω) and a hair dryer (125 Ω) connected in parallel, what is the equivalent resistance (R_P) value of this part?**

A. 113 Ω
B. 10.9 Ω
C. 6.5 Ω
D. 137 Ω

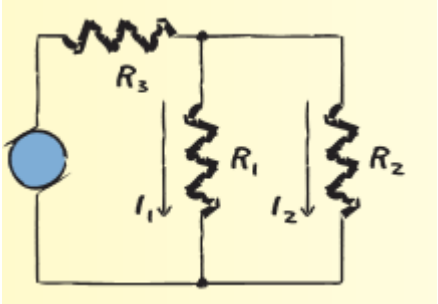

NOLOGIA 0501520027

5. If the equivalent resistance of the parallel segment (R_p=10.9 Ω) is connected in series with the resistance of the wires (R_s=1.50 Ω), then the total equivalent resistance of the circuit is equal to:

A. 12.4 Ω
B. 10.9 Ω
C. 16.3 Ω
D. 9.4 Ω

6. When a third device is added in parallel to the parallel part of a compound circuit, what happens to the total equivalent resistance of the circuit?

A. The total equivalent resistance increases.
B. The equivalent resistance of this part decreases, which reduces the overall resistance of the circuit.
C. The equivalent resistance remains constant and is unaffected.
D. The equivalent resistance becomes equal to the resistance of the wires only.

7. Find the equivalent resistance of the circuit, then find the electric current in each electrical circuit:

A. 8 A , 14 Ω
B. 8 A , 6 Ω
C. 2 A , 6 Ω
D. 3 A , 3 Ω

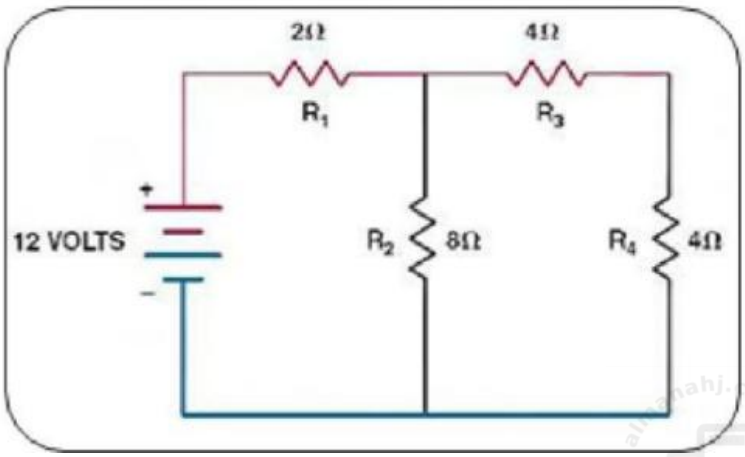

NOLOGIA 0501520027

A. 3.9 A , 50 Ω
B. 12 A , 7 Ω
C. 21 A , 31 Ω
D. 5 A , 9 Ω

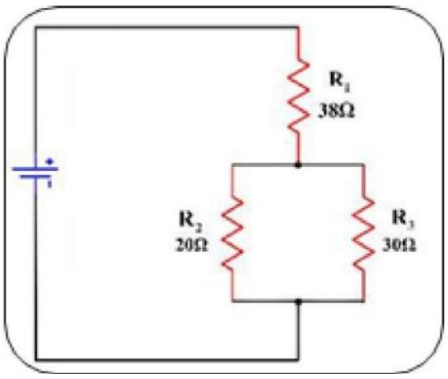

Question 15 & 16: State the properties of voltmeters and ammeters, in terms of their resistance. Identify the correct placements of ammeters and voltmeters in electric circuits. Page (70 & 72)

MCQ – Objective Questions

1. **In a compound circuit, if an additional device is added in parallel in the parallel segment, the total power drawn by the source from the battery is:**

A. It increases (due to a decrease in total resistance and an increase in total current).
B. It decreases (due to current fragmentation).
C. It remains constant because the voltage is constant.
D. It is immediately lost due to the palace circle.

NOLOGIA 0501520027

2. Based on the shape, what is the basic property of an ideal ammeter?

A. Its resistance is very high and it is connected in parallel.
B. Its resistance is very high and it connects in series.
C. Its resistance is very low (close to zero) and it is connected in series.
D. Its resistance is moderate and it connects anywhere.

الأميتر

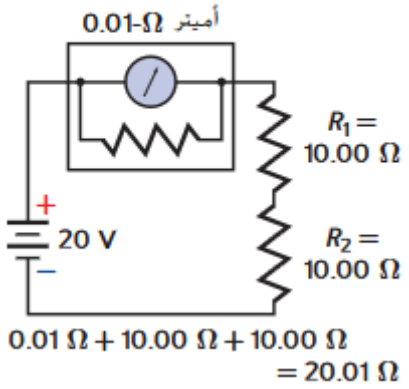

3. How should a voltmeter be connected in an electrical circuit, and what should its resistance value be?

A. Consistently, its resistance is low.
B. Consistently, its resistance is very high.
C. It is in parallel, and its resistance is low.
D. In parallel, and its resistance is very high.

الفولتميتر

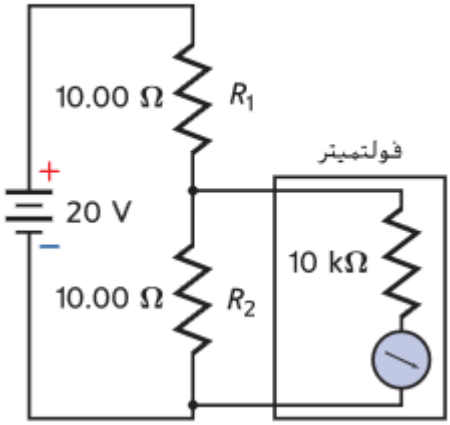

4. Why does the resistance of a voltmeter have to be so high (sometimes up to 10 MΩ)?

A. To increase the intensity of the current passing through the resistance that it measures.
B. To allow a large current to pass through the device.
C. To reduce the current passing through the device to the lowest possible level so as not to change the circuit voltage.
D. To act as a fuse that protects the circuit from damage.

NOLOGIA 0501520027

5. **When using an ammeter to measure current, why is it connected in series?**

A. In order to divide the voltage between it and the resistors.
B. So that the total current to be measured can pass through it without its value changing significantly.
C. Because the current in parallel circuits is always constant.
D. To reduce power wasted in the wires.

Question 17: Describe the Earth's magnetism. Page (548)

MCQ – Objective Questions

1. **Which of the following statements is true for all magnets regardless of their size or shape?**

A. It has only one North Pole.
B. It loses its attractive property if it is divided in half.
C. It always has two poles (north and south).
D. It attracts all types of metals, including copper and aluminum.

NOLOGIA 0501520027

2. **What is meant scientifically by magnets being "polarized"?**

A. It only works at very low temperatures.
B. It contains static electrical charges.
C. It has two opposite and distinct ends called the poles.
D. They are always made from pure iron only.

3. **When a strip magnet is suspended freely so that it can rotate, the pole that points towards the Earth's geographic north is called:**

A. The north pole of the magnet.
B. The south pole of the magnet.
C. The neutral pole.
D. The reflex pole.

4. **What are the sources that produce magnetic fields?**

A. Only magnets.
B. Only static electric charges.
C. Magnets and electric currents.
D. The heat generated in the copper wires.

5. **Which of the following metals are considered "highly magnetic permeable" materials that are strongly attracted to magnets and can become temporary magnets?**

A. Aluminum and copper.
B. Gold and silver.
C. Iron, nickel, and cobalt.
D. Tin and lead.

NOLOGIA 0501520027

6. **If you break a strip magnet into two pieces, what do you get?**

A. A single North Pole and a single South Pole.
B. Two pieces of non-magnetic metal.
C. Two new magnets, each with a north and south pole.
D. Positive pole and negative pole.

7. **Where is the magnetic field intensity of a magnet concentrated and where does it reach its maximum?**

A. Right in the middle of the magnet.
B. At the magnetic poles.
C. In the area surrounding the magnet, away from its poles.
D. Directly above the magnet.

8. **The Earth's magnetic north pole is actually located near:**

A. Geographic South Pole.
B. The geographic North Pole.
C. equator.
D. The Atlantic Ocean.

NOLOGIA 0501520027

Question 18: Explain how a current-carrying conductor placed in an external magnetic field experiences a magnetic force. Describe magnetic domains and relate them to the magnetic properties of ferromagnetic materials. Page(549)

MCQ – الأسئلة الموضوعية

1. **A group of adjacent atoms in a material whose magnetic poles are parallel is known as:**

A. Magnetic flux.
B. solenoid.
C. Magnetic field.
D. Polarity.

2. **Given the figure, what is the position of the "magnetic domains" in a highly permeable magnetic material (such as iron) when it is in its "non-magnetized" state?**

A. They are all arranged in one direction towards the north.
B. They are arranged in closed circular rings.
C. They are directed in random directions (cancel each other out).
D. They are perfectly parallel to the poles of the material.

مادة غير ممغنطة

NOLOGIA 0501520027

3. **According to the diagram, what happens to these magnetic bands when a strong magnet is placed near a piece of iron?**

A. The bands fade and the material loses its properties.
B. The speed of particle movement within the material increases.
C. The magnetic fields are arranged and parallel to the direction of the effective field.
D. The polarity of the bands is reversed abruptly and regularly.

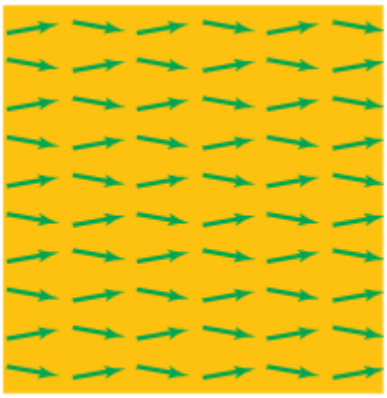

مادة ممغنطة

4. **What is the correct scientific definition of "magnetic flux"?**

A. It is the speed at which the North Pole moves southward.
B. It is the force that a magnet exerts on distant objects.
C. It is the number of magnetic field lines that pass through a surface perpendicular to those lines.
D. It is the type of material that a permanent magnet is made of.

5. **What happens to the bands of an iron nail (temporary magnet) when it is removed from a strong magnet?**

A. The bands revert to a random order and the material loses its magnetism.
B. The bands remain parallel and it becomes a permanent magnet.
C. The attraction between the domains increases.
D. The bands explode due to the field fading.

NOLOGIA 0501520027

6. **A permanent magnet can be made by heating a highly magnetically permeable material and then cooling it while it is in a state of:**

A. A rapid rotation around itself.
B. The presence of a strong magnetic field.
C. Completely sealed from the air.
D. He was exposed to a weak electric current.

Question 19: Define magnetic fields. Describe the characteristics of magnetic fields and sketch the field lines around a permanent magnet. Page (551)

MCQ – Objective Questions

1. **Which of the following statements accurately describes "magnetic field lines"?**

A. These are real lines that can be seen with the naked eye inside the magnet.
B. These are visual representations used to show the direction and strength (intensity) of a field.
C. These are lines that always start from the south pole and end at the north pole outside the magnet.
D. These are the paths of static electricity surrounding the magnet.

NOLOGIA 0501520027

2. **How can we infer that a magnetic field is "strong" in a particular area by drawing lines?**

A. When the lines are too long.
B. When the lines are perfectly straight and do not curve.
C. When the field lines are very close together (high density).
D. When the number of lines passing through the space decreases.

3. **Magnetic field lines exit the pole ..... and enter the pole ..... outside the magnet:**

A. South / North.
B. North/South.
C. Positive / Negative.
D. East/West.

4. **The number of magnetic field lines passing through a surface perpendicular to it is called:**

A. Magnetic force.
B. Current intensity.
C. Magnetic flux.
D. Electromagnetic induction.

NOLOGIA 0501520027

Question 20: Sketch the magnetic field lines around a long current-carrying wire and apply the right-hand rule to indicate the direction. Draw the magnetic field lines around a loop of current-carrying wire and apply the right hand rule to indicate the direction. Page (553)

MCQ – Objective Questions

1. **When using the right-hand rule to determine the direction of a magnetic field around a straight wire carrying a current (as in the figure), what does the right thumb point towards?**

A. The direction of the magnetic force.
B. The direction of the north pole of the magnet.
C. The direction of conventional current (positive charges).
D. Direction of electron movement (actual current).

2. **According to the right-hand rule shown in the figure, the direction of the fingers wrapped around the wire indicates:**

A. Direction of electrical resistance.
B. Direction of magnetic field lines (B).
C. The direction of the flow of electric charges.
D. Direction of electromotive force.

NOLOGIA 0501520027

3. **Considering the patterns formed by the iron filings in the figure (top part), how can the shape of the magnetic field lines around a straight wire be described?**

A. Straight lines parallel to the wire.
B. Lines extending from the center of the wire outwards.
C. Closed circular loops with the wire at their center.
D. Oval lines intersect at the poles of the wire.

4. **If an electric current flows in a vertical wire "upwards," then, according to the right-hand rule, the direction of the magnetic field when viewed from above is:**

A. In a clockwise direction.
B. In a counter-clockwise direction.
C. Parallel to the direction of the current.
D. Vertically towards the wire from all sides.

5. **What is the relationship between the intensity of the magnetic field and the distance from a straight wire carrying a current?**

A. The intensity of the field increases with distance from the wire.
B. The intensity of the field remains constant regardless of the distance.
C. The intensity of the magnetic field is inversely proportional to the distance from the wire.
D. The intensity of the field is directly proportional to the square of the distance.

NOLOGIA 0501520027

6. **The intensity of the magnetic field around a long, straight wire carrying a current is proportional to:**

A. Directly with the current and inversely with the distance from the wire.
B. Inversely with the current and directly with the distance from the wire.
C. Directly proportional to both the current and the distance.
D. It is not affected by current or distance.

7. **The scientist Oersted discovered that a compass deflects when placed near a wire, which means that:**

A. The wire is made of a permanent magnetic material.
B. Electric current produces a magnetic field.
C. The compass is affected by the heat generated by the wire.
D. The Earth's magnetic field stops when an electric current passes through it.

NOLOGIA 0501520027

Question 21: Draw the magnetic field lines inside and around a solenoid carrying current and identify its poles. Apply the right-hand rule to indicate the direction of the magnetic field in and around a solenoid carrying current. Describe an electromagnet, the factors affecting its strength, and its advantages over a permanent magnet. Explore experimentally the relationship between electric current and magnetic field and the factors that affect the strength of an electromagnet. Page (554)

MCQ – Objective Questions

1. **What happens to the magnetic field lines when a wire is shaped into a "loop" and an electric current passes through it?**

A. The lines scatter in random directions.
B. The magnetic field is zero inside the center of the loop.
C. The field lines accumulate and all become aligned in one direction within the loop.
D. The lines remain straight and parallel to the plane of the ring.

2. **Looking at the diagram, if the direction of the magnetic field "inside" the loop is towards you (outwards), what is its direction "outside" the loop?**

A. It's heading towards you too.
B. He moves away from you (inwards).
C. It should be perfectly parallel to the loop wires.
D. The field stops at the outer wire's boundary.

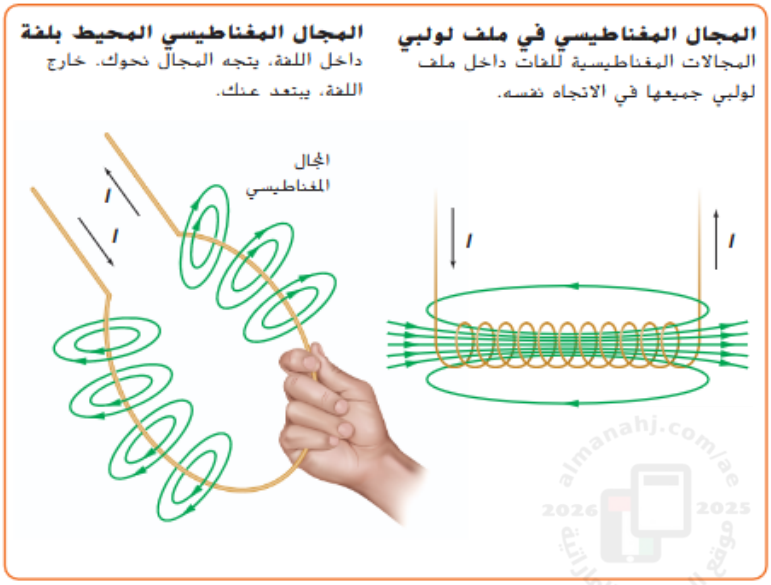

NOLOGIA 0501520027

3. **When applying the right-hand grip rule to "any part" of the wire loop, the fingers wrapped around the wire always point towards:**

A. Direction of electric current (I).
B. The direction of the south pole of the magnet.
C. Direction of magnetic field lines (B).
D. The direction of the applied magnetic force.

4. **Which of the following statements accurately describes the magnetic field produced by a single wire loop?**

A. It is a uniform magnetic field all around the wire.
B. The single-loop current forms a field that surrounds each loop, and fields accumulate within it.
C. The resulting field is weaker than the field produced by a straight wire of the same current.
D. The field lines inside the ring are always in a clockwise direction.

5. **What happens to the magnetic field generated inside the wire loop if the direction of the electric current flow is reversed?**

A. The magnetic attraction strength increases.
B. The direction of the magnetic field is reversed inside and outside the loop.
C. The magnetic field is transformed into a static electric field.
D. The magnetic field is not affected by a change in the direction of the current.

NOLOGIA 0501520027

6. **The number of magnetic field lines passing through a surface perpendicular to it is called:**

A. Magnetic force.
B. Current intensity.
C. Magnetic flux.
D. Electromagnetic induction.

7. **When determining the polarity of an "electromagnet" using the right-hand rule, the fingers point in the direction of the current while the thumb points in the opposite direction:**

A. The south pole of the file.
B. The north pole of the file.
C. The direction of the driving force.
D. Source of power.

8. **A permanent magnet loses its magnetic properties if exposed to:**

A. Extreme cooling.
B. Paint with an insulating material.
C. Overheating or a strong fall.
D. Put it in the water.

NOLOGIA 0501520027

9. **In computer hard drives, information is recorded by reversing the direction of the magnetic field of:**

A. A giant permanent magnet.
B. A very small solenoid (electromagnet).
C. A sensitive compass needle.
D. Constant current.

10. **To increase the magnetic field strength of a solenoid, we can do all of the following except:**

A. Increase the intensity of the current passing through it.
B. Increase the number of wire turns.
C. Place an iron rod inside the coil.
D. Increase the spacing between coil turns.

11. **A wire coil consisting of many turns that behaves like a magnet when a current passes through it is called:**

A. The electrical capacitor.
B. Solenoid.
C. Photoresistor.
D. The ammeter.

NOLOGIA 0501520027

Question 22: Apply the right-hand rule to find the direction of the force on a current-carrying wire placed in an external magnetic field. Page (556)

MCQ – Objective Questions

1. **According to the right palm rule illustrated in the figure, the direction of the palm (palm) indicates:**

A. Direction of charge flow.
B. The direction of the applied magnetic force.
C. The direction of the magnetic force acting on the wire.
D. Direction of electrical resistance of the wire.

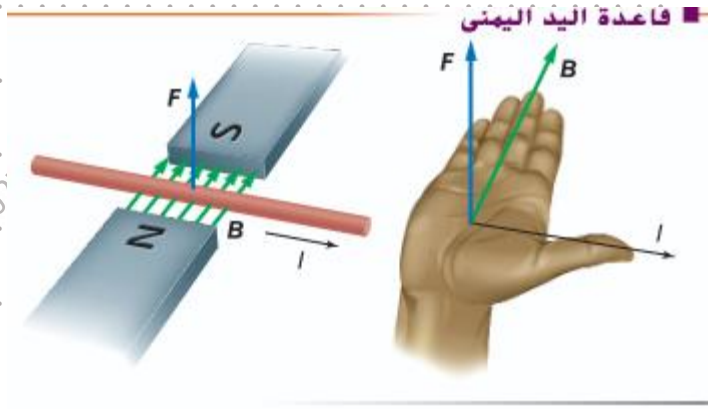

2. **If the fingers of the right hand are pointed to the right (representing field B) and the thumb is pointed upwards (representing current I), then based on the diagram, the direction of the magnetic force is:**

A. Parallel to the direction of the current
B. Out of the page (towards the observer).
C. Entering the page (away from the viewer).
D. Downwards, parallel to the connecting wires.

NOLOGIA 0501520027

3. **The magnetic force acting on the wire is always in the direction of:**

A. Parallel to the magnetic field lines.
B. Parallel to the direction of the electric current.
C. Perpendicular to both the direction of the magnetic field and the direction of the current.
D. A 45-degree angle is always present between the field and the current.

4. **What happens to the direction of the magnetic force acting on the wire if only the direction of the electric current passing through it is reversed?**

A. The direction of the force remains unchanged.
B. The direction of the force is reversed to become the opposite direction.
C. The force becomes equal to zero.
D. The wire rotates in a circular path instead of moving in a straight line.

NOLOGIA 0501520027

Question 23: Apply the equation F=ILBsin(θ) to calculate the magnitude of the force on a straight segment of a current carrying wire placed in a uniform magnetic field. Page (559)

MCQ – Objective Questions

1. **A straight wire 0.10 m long carrying a current of 5 A is placed in a uniform magnetic field perpendicular to the wire. If the force acting on the wire is 0.20 N, what is the magnitude of the magnetic field (B)?**

A. $0.1\ T$
B. $0.25\ T$
C. $1\ T$
D. $0.40\ T$

NOLOGIA 0501520027

2. A wire 0.50 m long carrying a current of 8.0 A is perpendicular to a magnetic field of 0.40 T. What is the magnitude of the force acting on the wire?

A. $1.6\ N$
B. $3\ N$
C. $16\ N$
D. $2.56\ N$

3. A wire 75 cm long carrying a current of 6.0 A is perpendicular to a uniform magnetic field. The force acting on the wire is 0.60 N. What is the magnitude of the magnetic field?

A. $14\ T$
B. $2\ T$
C. $0.13\ T$
D. $3.54\ T$

NOLOGIA 0501520027

4. What is the current required to produce a force of 0.38 N on a wire 10.0 cm long perpendicular to a magnetic field of magnitude T 0.49?

A. $8.7\ A$
B. $15.4\ A$
C. $2.7\ A$
D. $7.8\ A$

5. A copper wire 40.0 cm long carries a current of 6.0 A and weighs 0.35 N. A magnetic field is present on the wire that is strong enough to counteract the force of gravity. What is the strength of the magnetic field?

A. $0.47\ T$
B. $0.15\ T$
C. $8.9\ T$
D. $0.14\ T$

NOLOGIA 0501520027

Questions 24 & 25: Apply the right hand rule to determine the direction of the force acting on a charged particle moving in a magnetic field. Apply the equation F=qvBsin(ɵ) to calculate the magnitude of the force acting on a charged particle moving in a magnetic field. Page (563)

MCQ – Objective Questions

1. **Magnetic field strength (B) is measured in tesalas (T), which is equivalent to:**

A. N / (A · m)
B. A / (N · m)
C. N · A / m
D. V / A

2. **The magnetic force acting on a current-carrying wire placed in a magnetic field is zero when:**

A. The current and the field are parallel to each other (zero angle).
B. The current is perpendicular to the field (90–degree angle).
C. The length of the wire increases significantly.
D. The magnetic field is very strong.

NOLOGIA 0501520027

3. What is the magnitude and direction of the force acting on the proton shown in the figure?

A. 3.2×10^{-12} N ،لأسفل
B. 32×10^{-12} N ،لأعلى
C. 3.2×10^{-12} N ،لأعلى
D. 4.7×10^{-12} N ،لأعلى

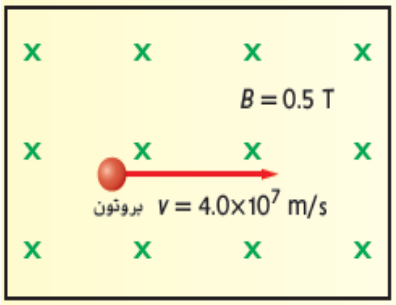

4. A flow of diionic particles (losing two electrons and thus carrying two primary positive charges) at a speed of 3.0×10^{4} m/s perpendicular to a magnetic field of 0.90×10^{-2} T. What is the force acting on each ion?

A. 86×10^{-16} N
B. 8.6×10^{-16} N
C. 5.47×10^{-12} N
D. 9×10^{-13} N

NOLOGIA 0501520027

5. A beam of triionary particles (each carrying three elementary positive charges) enters a magnetic field of 4.0×10^{-2} T. The particles travel at a speed of 9.0×10^{6} m/s and move at right angles to the field. What is the magnitude of the force acting on each particle?

A. 17×10^{-15} N
B. 6.81×10^{-12} N
C. 12×10^{-13} N
D. 1.7×10^{-13} N

6. A singly ionized particle experiences a force of 4.1×10^{-13} N when moving at a right angle through a magnetic field of T 0.61. What is the particle's speed?

A. 5.9×10^{6} m/s
B. 420×10^{6} m/s
C. 3.2×10^{6} m/s
D. 4.2×10^{6} m/s

NOLOGIA 0501520027

7. **Doubly ionized helium atoms (alpha particles) move at right angles to a magnetic field at a speed of 4.0 x 10^4 m/s. The force on each particle is 6.4 x 10^{-16} N. What is the strength of the magnetic field?**

A. 0.5 T
B. 0.05 T
C. 9.4 T
D. 8.97 T

8. **Given the figure, if there is a proton (positive charge) moving to the right within a magnetic field directed "inside the page" (×), what is the direction of the magnetic force acting on it?**

A. To the right (in the direction of movement).
B. Downwards.
C. Upwards. (Using the right-hand rule: thumb to the right, fingers inwards, palm upwards).
D. Towards the outside of the page.

NOLOGIA 0501520027

9. **If the proton in the previous question were replaced by an "electron" (negative charge) moving in the same direction, what would be the direction of the force?**

A. Upwards as well.
B. Downwards. (Because the force on the negative charge is in the opposite direction to that determined by the right-hand rule).
C. Leftward.
D. The force will be zero because the charge is negative.

10. **When applying the right-hand rule to determine the force on a charged particle, what do the four outstretched fingers point to?**

A. The direction of the particle's velocity (v).
B. Direction of the magnetic field (B).
C. Direction of magnetic force (F).
D. The direction of alternating current.

NOLOGIA 0501520027

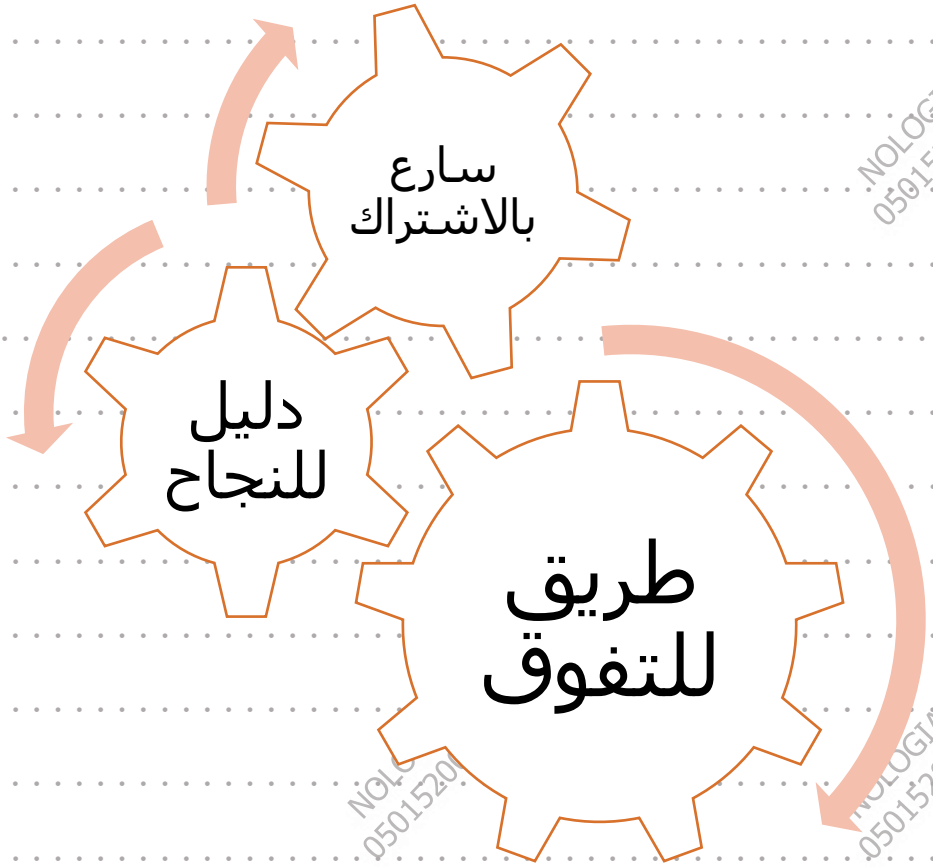

للحجز التواصل عبر الـ WhatsApp من خلال الضغط على الرقم:

0501520027

مع أطيب التمنيات بالنجاح والتوفيق ...

النهاية ...

NOLOGIA 0501520027